Injector YP2000cc

Part Number #34020

Basic Specifications

Electrical

- Impedance 9 Ω
- Maximum power supply 16 V

Physical

- Operating temperature range -40 to 110 °C
- System pressure maximum 8 bar
- Weight 22 g
- Denso connector
- Flow rate 2225 cc/min @ 3 bar, 100% duty on VP C16 fuel at 52 °C (125 °F)
- 14 mm top O-Ring
- Fuel rail bore size 13.89 mm (0.547")

Compatibility

- All MoTeC ECUs

Accessories

- #34021 Adapter top 14mm for YP 2000 cc injectors
- #34033 Connector for YP 2000 cc injectors

Dimensions [mm]

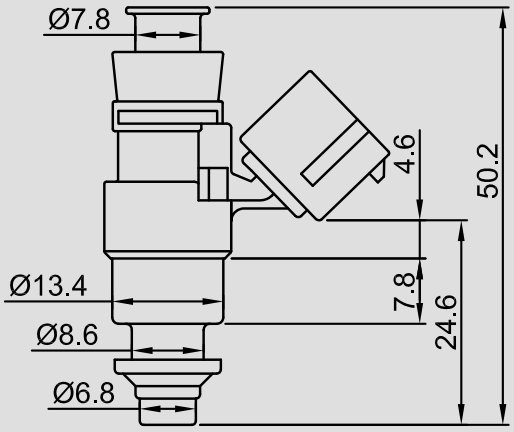

Applications

The YP2000cc injector is a high impedance, "saturated" injector. Suitable for most fuel injected engines.

Features

- Excellent low pulse width response
- Good atomization
- Excellent consistency

Wiring

#34015 Pin	ECU pin
Power	12V
Drive	Injector Output

Refer to the ECU User Manual for pin numbers.

Note: All MoTeC User Manuals are available from www.motec.com/downloads

Calibration

Procedure described for Version 3 software.
Configuration in Version 2 software is similar.

- On the **Adjust** menu, click **General Setup** and then click **Fuel.**
- Click **Setup** and enter **Injector Current 0.0.** **Note:** This is not the actual injector current, but this setting disables the current control.
- Press **ESC** and click **Battery Comp.**
- Enter values according to the following table:

Injector Battery Compensation							
Fuel Pressure		**Dead Time [µsec]** (1000 µsec = 1 ms)					**Flow [cc/min]**
[kPa]	**[psi]**	**8 V**	**10 V**	**12 V**	**14 V**	**16 V**	
300	43.5	1455	950	680	495	375	2225
310	45	1475	965	690	500	380	2255
345	50	1540	1020	720	525	405	2365
379	55	1605	1065	750	550	430	2470
414	60	1680	1105	780	580	455	2575
448	65	1750	1140	810	605	475	2680
483	70	1825	1175	840	635	495	2780
517	75	1895	1220	880	665	505	2875
552	80	1965	1270	925	690	515	2970
586	85	2050	1320	965	715	520	3055
621	90	2160	1360	995	750	540	3140
655	95	2290	1395	1015	780	565	3255
689	100	2410	1430	1035	810	590	3300
724	105	2515	1485	1060	830	605	3375
758	110	2620	1555	1095	840	615	3445
793	115	2750	1620	1135	855	630	3515
827	120	2935	1675	1175	875	665	3580
862	125	3175	1720	1220	900	715	3645
896	130	3435	1755	1265	925	775	3710