CDI

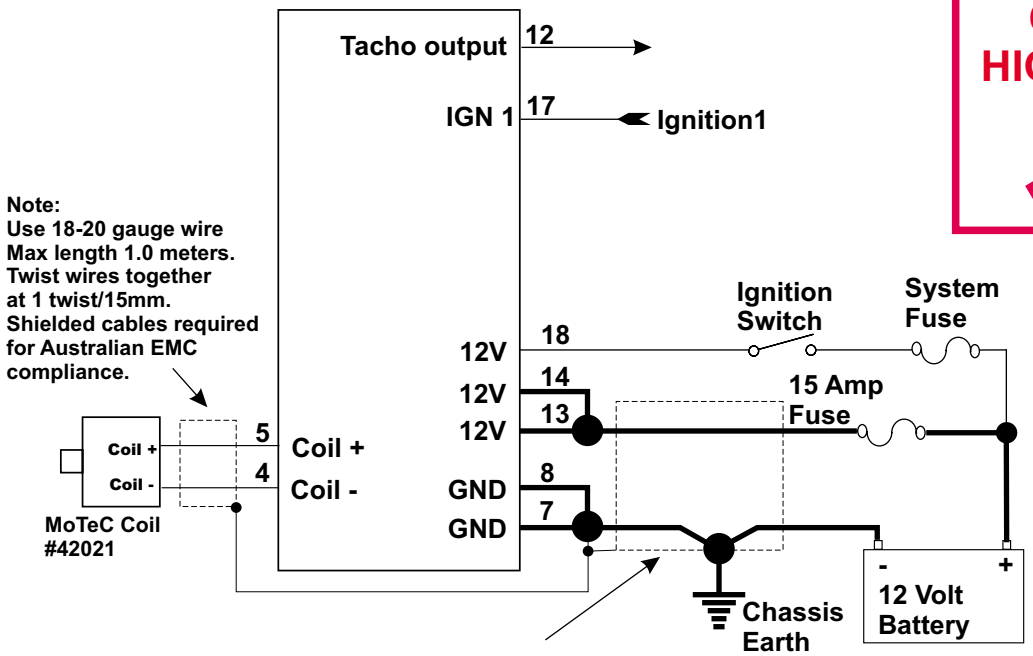

Note:
Use 20 gauge wire with junction
<100mm from connector joined to
14 gauge wire to battery. Max wiring
length 2.50 meters.
Twist power wires together
at 1 twist/15mm.
Shielded cables required for Australian
EMC compliance.

CAUTION!
HIGH VOLTAGE

SPECIFICATIONS

Supply Voltage 12-14V DC negative ground
Coil Primary voltage = 480V
Max Ignition frequency = 600Hz
Max Supply Current 6.0A
Power output 115Mj

IMPORTANT: This diagram is for MoTeC #41009 ONLY
Use M33 sheet 3 for MoTeC # 41013. Using the incorrect wiring diagram may cause damage to CDI or wiring.

PART 41009 IS NOT A DIRECT REPLACEMENT FOR 41013

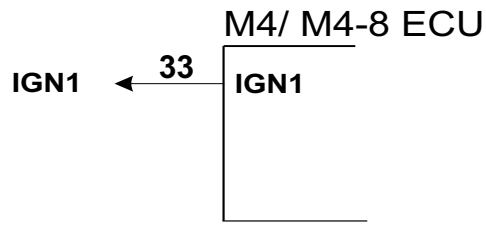

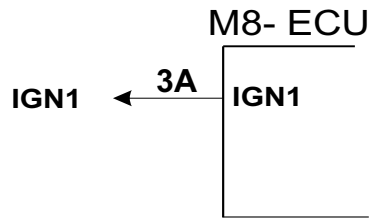

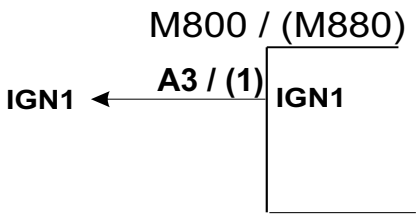

Looking into Connector on CDI (Version 2)

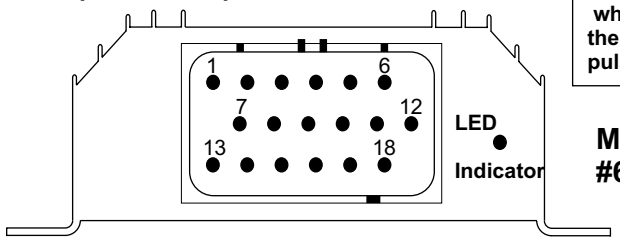

Note:
The LED indicator wil illuminate when power is first applied and then flash with each trigger pulse.

MoTeC Connector Kit #65018

ECU setup for Fall edge

Setup	ign	1
	COIL	1
	dELL	0

MoTeC	Title SINGLE CHANNEL CDI				Sheet No	Drawing No
	Date 03/10/2006	Drawn ST	App	Products ECU	2 of 3	M33