IMPORTANT: This diagram is for MoTeC #41010 ONLY
Use M40 sheet 2 for MoTeC # 41005. Using the incorrect wiring diagram may cause damage to CDI or wiring.

PART 41010 IS NOT A DIRECT REPLACEMENT FOR 41005

CAUTION!
HIGH VOLTAGE

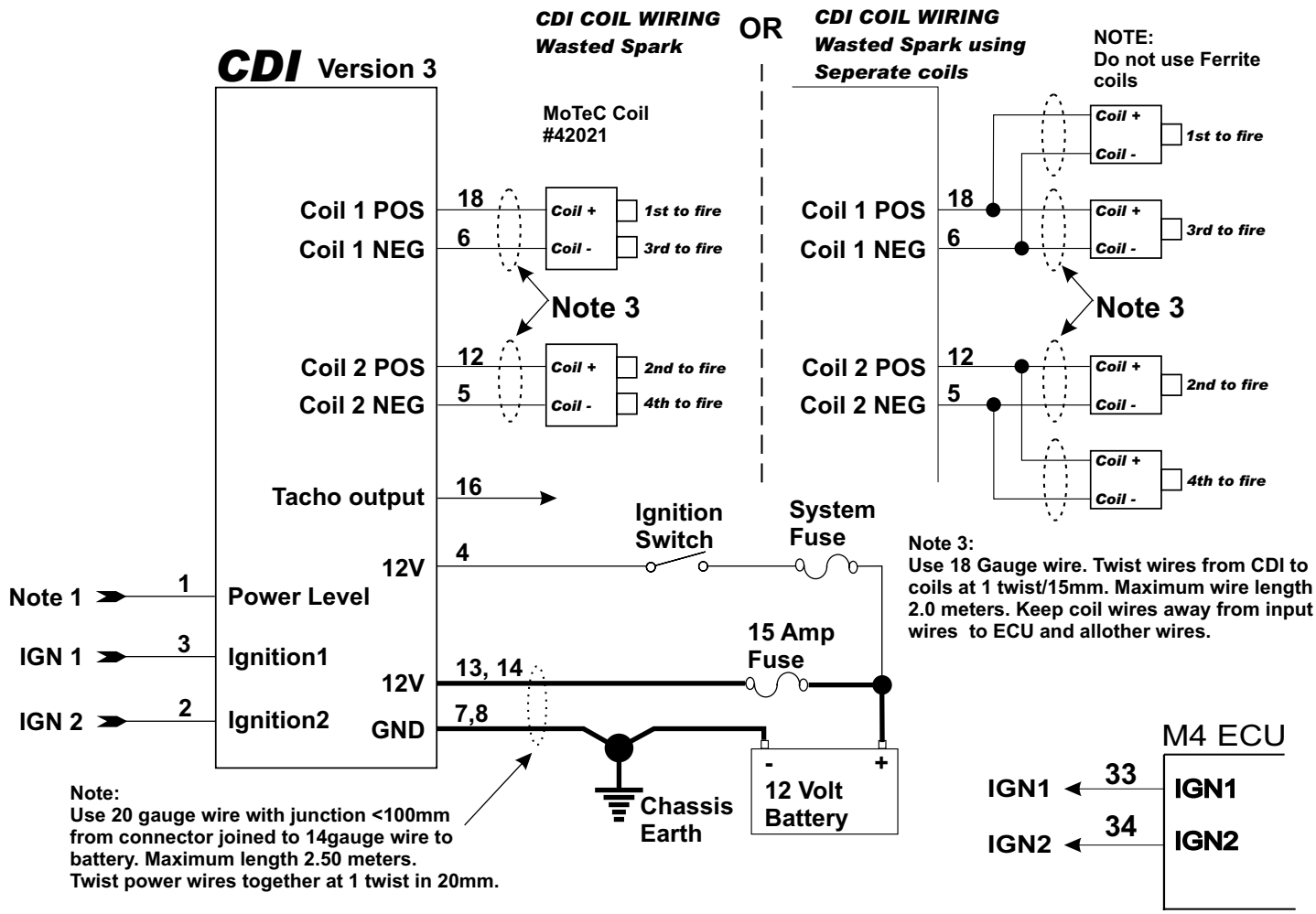

Note: All coil & power wires must be shielded to comply with Australian EMC standards.

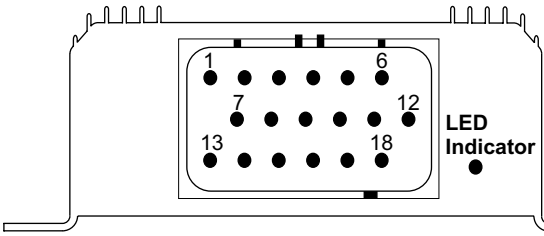

Looking into Connector on CDI

MoTeC Connector Kit #65018

The LED indicator will illuminate when power is first applied and then extinguish. The led will flash briefly for each consecutive trigger input.

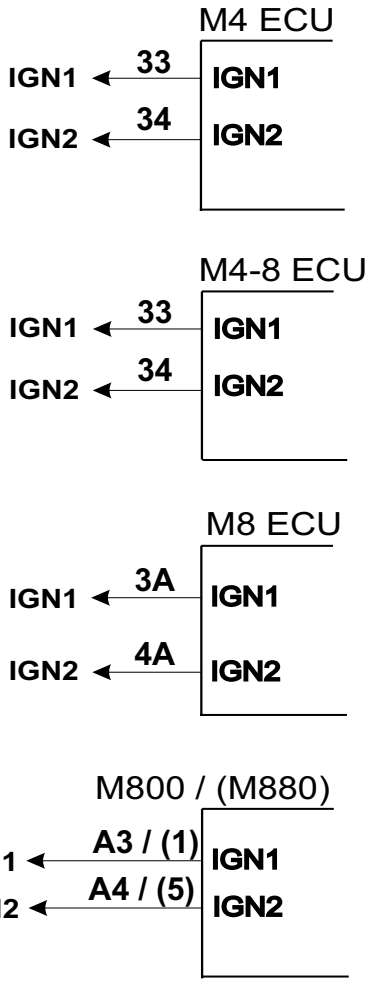

NOTE 1: Power Level Input Setting		
Connection	Power Output	Input Frequency
Open	105mJ	650Hz
Grounded	150mJ	450Hz

NOTE 2: Specifications
Tacho output: 12V, 25mA square wave
Maximum Power supply: 16 Volt
Maximum Supply Current: 6.0A
Maximum operating Temperature: 85 Deg C.
Maximum Ignition rate 1,000Hz
Ignition Inputs cannot be fired at the same time

ECU SETUP

Setup		
	ign	1
	COIL	2
	dELL	0

MoTeC	Title DUAL CHANNEL CDI				Sheet No	Drawing No
	Date 20/11/2008	Drawn ST	App KT	Products ECU	3 of 3	M40