CDI

IMPORTANT: This diagram is for MoTeC #41012 ONLY
Use M47 sheet 1 for MoTeC # 41002. Using the incorrect wiring diagram may cause damage to CDI or wiring.

PART 41012 IS NOT A DIRECT REPLACEMENT FOR 41002

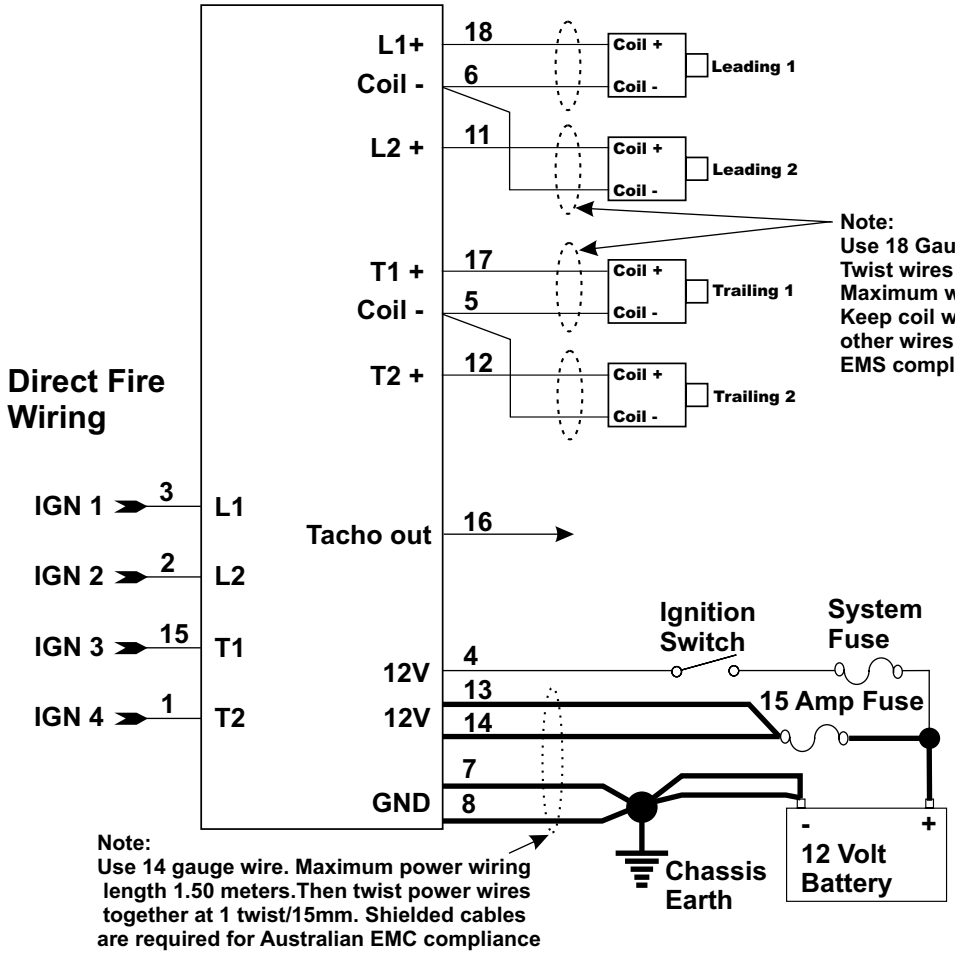

Note:
Use 18 Gauge wire.
Twist wires from CDI to coils at 1 twist/15mm.
Maximum wire length1.5 meters.
Keep coil wires away from input wires to ECU and all other wires. Shielded cables required for Australian EMS compliance.

Note:
Use 14 gauge wire. Maximum power wiring length 1.50 meters.Then twist power wires together at 1 twist/15mm. Shielded cables are required for Australian EMC compliance

CAUTION!
HIGH VOLTAGE

M400/M600/M800 / (M880)

IGN1	A3 / (1)	IGN1
IGN2	A4 / (5)	IGN2
IGN3	A5 / (4)	IGN3
IGN4	A6 / (10)	IGN4

ECU Setup

Ignition Type	=140
Coils	= 4
Dwell	= 0

Looking into Connector on CDI (Version 3)

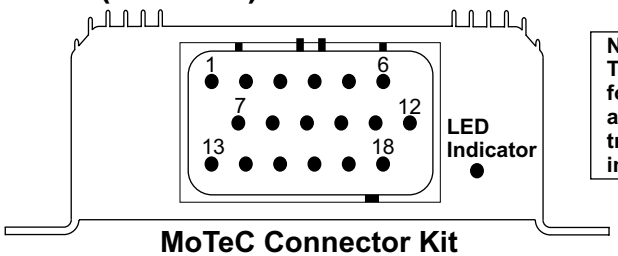

MoTeC Connector Kit #65018

Note:
The LED indicator wil illuminate for 1 second when power is first applied and flash with each trigger pulse. A double flash indicates an error.

Note:
Do not mount the CDI where it can be exposed to water.
Do not mount the CDI near hot engine components.
The CDI must be isolated from strong Vibration.

Specifications	
Maximum Supply Current:	7.5A
Tacho output:	12V, 25mA square wave
Maximum operating Temperature:	85 Deg C.
Maximum RPM:	11,000

MoTeC	Title	MoTeC Rotary CDI			Sheet No	Drawing No
	Date 26/07/2006	Drawn ST	App	Products ECU	4 of 6	M47

CDI

IMPORTANT: This diagram is for MoTeC #41012 ONLY
Use M47 sheet 2 for MoTeC # 41002. Using the incorrect wiring diagram may cause damage to CDI or wiring.

PART 41012 IS NOT A DIRECT REPLACEMENT FOR 41002

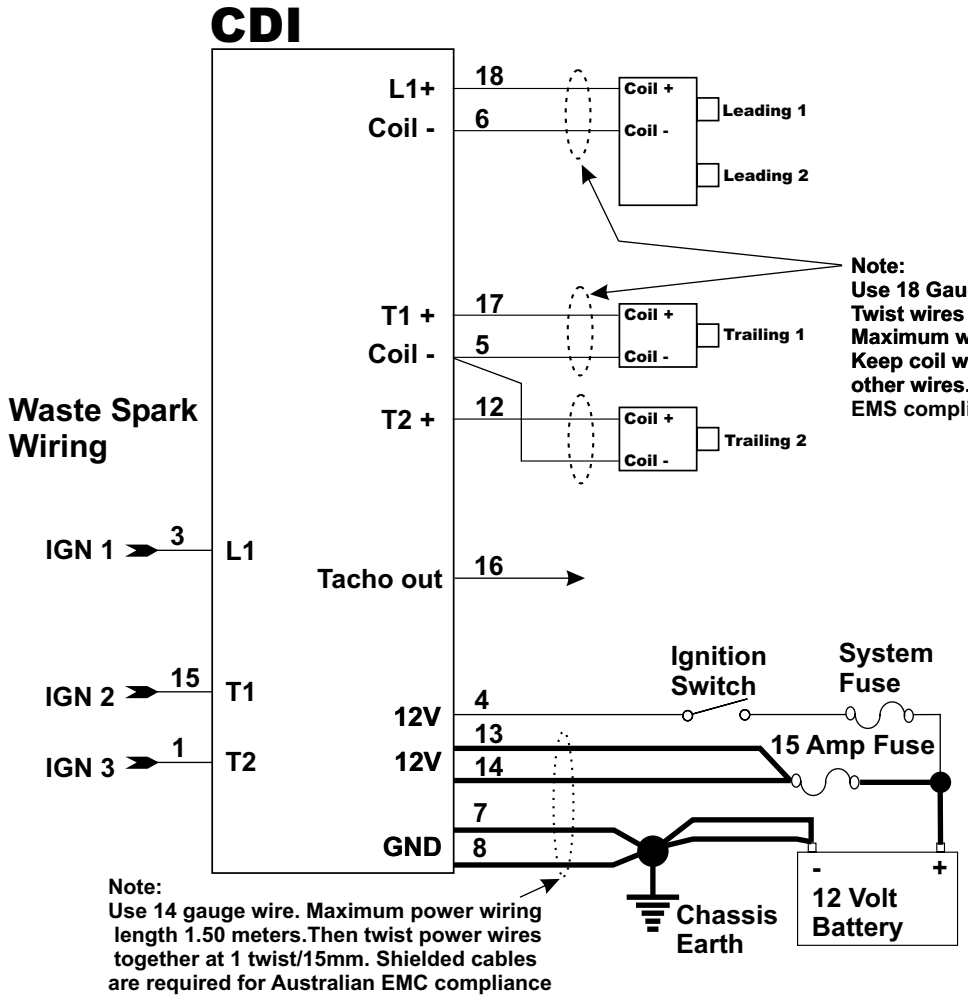

Note:
Use 18 Gauge wire.
Twist wires from CDI to coils at 1 twist/15mm.
Maximum wire length1.5 meters.
Keep coil wires away from input wires to ECU and all other wires. Shielded cables required for Australian EMS compliance.

Note:
Use 14 gauge wire. Maximum power wiring length 1.50 meters.Then twist power wires together at 1 twist/15mm. Shielded cables are required for Australian EMC compliance

CAUTION!
HIGH VOLTAGE

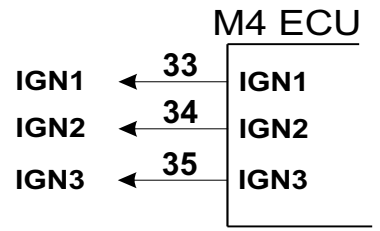

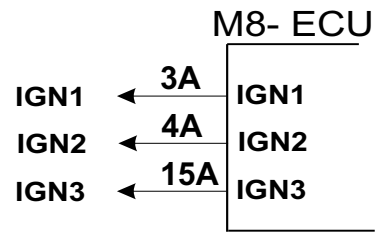

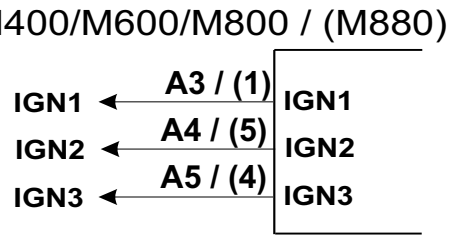

ECU Setup	
Ignition Type	=102
Coils	= 1
Dwell	= 0

Looking into Connector on CDI (Version 3)

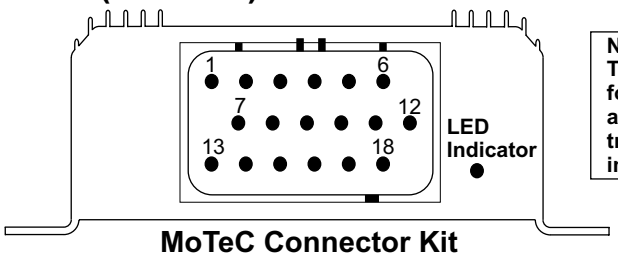

MoTeC Connector Kit #65018

Note:
The LED indicator wil illuminate for 1 second when power is first applied and flash with each trigger pulse. A double flash indicates an error.

Note:
Do not mount the CDI where it can be exposed to water.
Do not mount the CDI near hot engine components.
The CDI must be isolated from strong Vibration.

Specifications	
Maximum Supply Current:	7.5A
Tacho output:	12V, 25mA square wave
Maximum operating Temperature:	85 Deg C.
Maximum RPM:	11,000

MoTeC	Title	MoTeC Rotary CDI			Sheet No	Drawing No
	Date 26/07/2006	Drawn ST	App	Products ECU	5 of 6	M47

CDI

IMPORTANT: This diagram is for MoTeC #41012 ONLY
Use M47 sheet 3 for MoTeC # 41002. Using the incorrect wiring diagram may cause damage to CDI or wiring.

PART 41012 IS NOT A DIRECT REPLACEMENT FOR 41002

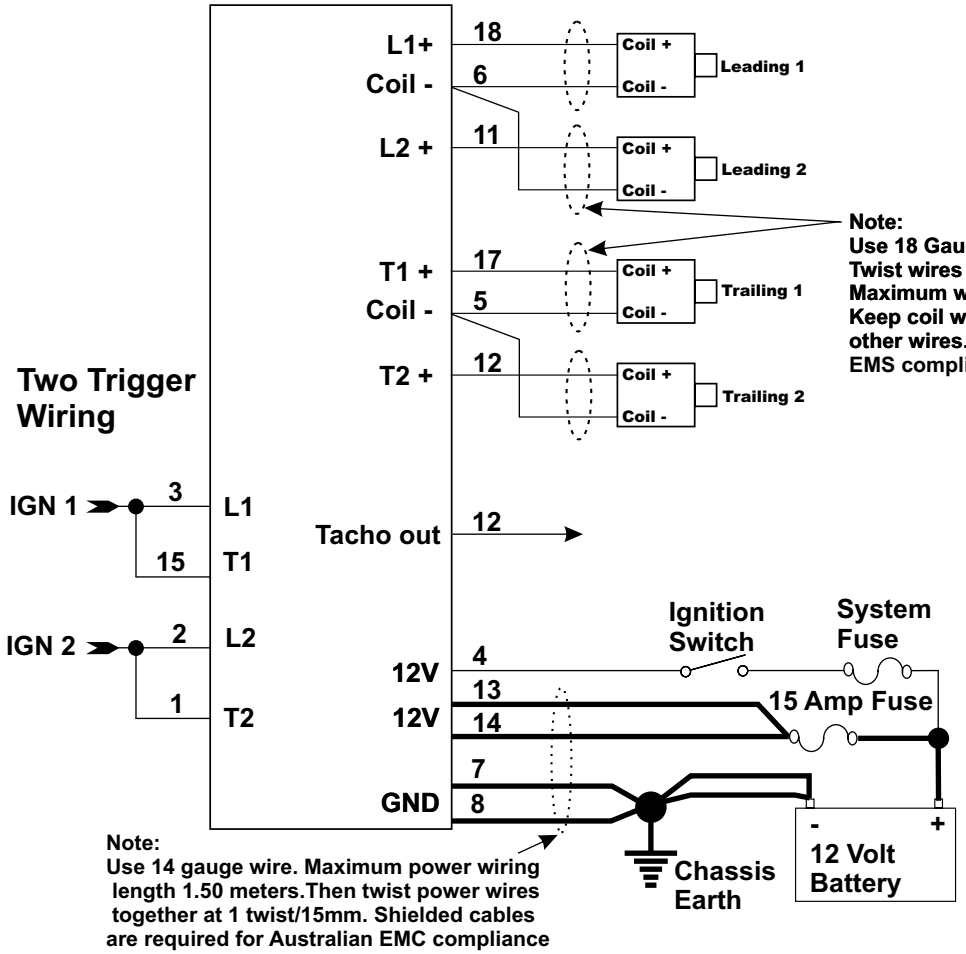

Note:
Use 18 Gauge wire.
Twist wires from CDI to coils at 1 twist/15mm.
Maximum wire length1.5 meters.
Keep coil wires away from input wires to ECU and all other wires. Shielded cables required for Australian EMS compliance.

Note:
Use 14 gauge wire. Maximum power wiring length 1.50 meters.Then twist power wires together at 1 twist/15mm. Shielded cables are required for Australian EMC compliance

CAUTION!
HIGH VOLTAGE

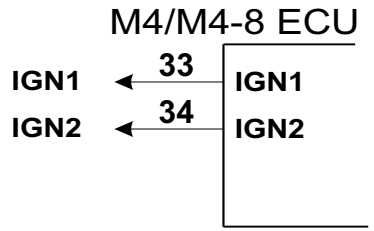

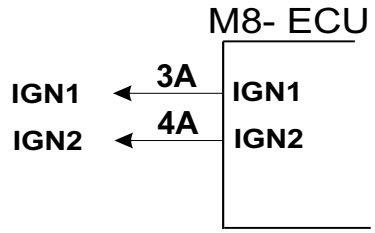

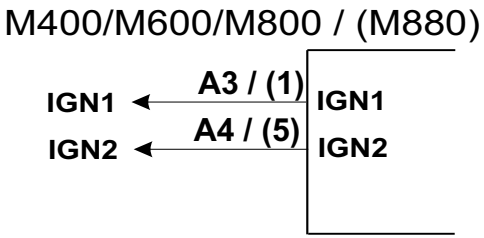

ECU Setup
Ignition Type =1
Coils = 2
Dwell = 0
No ignition split in this mode

Looking into Connector on CDI (Version 3)

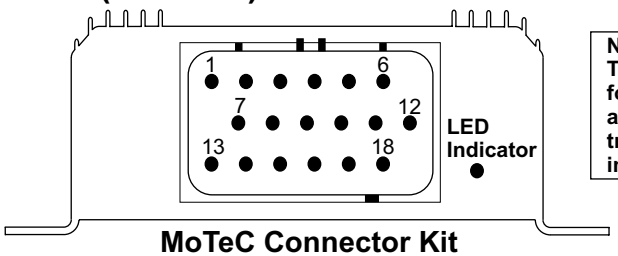

MoTeC Connector Kit #65018

Note:
The LED indicator wil illuminate for 1 second when power is first applied and flash with each trigger pulse. A double flash indicates an error.

Note:
Do not mount the CDI where it can be exposed to water.
Do not mount the CDI near hot engine components.
The CDI must be isolated from strong Vibration.

Specifications	
Maximum Supply Current:	7.5A
Tacho output:	12V, 25mA square wave
Maximum operating Temperature:	85 Deg C.
Maximum RPM:	11,000

MoTeC	Title MoTeC Rotary CDI				Sheet No	Drawing No
	Date 26/07/2006	Drawn ST	App	Products ECU	6 of 6	M47