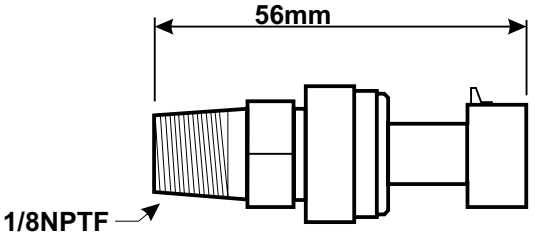


**MoTeC 1723 KPA (250 PSI) Absolute Part Number 58032**
**MoTeC Connector Part Number 65013**

**Top view of sensor**

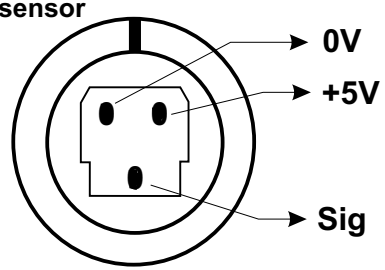


## ADL / ADL2 / SDL Setup

**Channel Assignments**
Assign the pressure Channel to the appropriate pin

**Sensor Calibration**
Press "Select" and choose a calibration file that suits your needs. For example:
TI 0-250 PSIG.C1P = PSI Gage calibration

## M800 / M880 Setup

Note: M800 Version 3.3 + software Use the ADL calibration method

| Parameter | Display as KPA |
|---|---|
| Sensor Calibration | -44 |
| 0 Pressure AD Value | 154 |
| *Pressure / AD Value | 1800 / 1011 |
| **Use interpolate function to complete table values** | |

## M4 / M4-8 Setup

(DISPLAY IN KPA)

| Parameter / PIN | Aux Temp | Aux Volt |
|---|---|---|
| Sensor Calibration | -3 | -2 |
| 0 Pressure AD Value | 154 | |
| *Pressure / AD Value | 1800 / 1011 | |
| **Use interpolate function to complete table values** | | |

*** AD values at higher pressures must increase by a value of 4. See the ECU help files for further information.**

**NOTE 1:**
+ 5V Pins are 18, 28, 44
0V Pins are 17, 27, 33, 40, 43
Analog Volt Input Pins are 1, 2, 3, 4, 5, 19, 20, 21, 22, 23, 24, 25, 26, 45, 46, 47, 48, 49, 50

**NOTE 2:**
M4 and M4-8 input pins are 17 & 18

| NOTE 3: | M800 | M880 |
|---|---|---|
| +5V ENG Pin | A2 | 16 |
| +5V AUX Pin | A9 | 34 |
| 0V ENG Pin | B16 | 27 |
| 0V AUX Pin | B15 | 11 |
| Analog Volt Input Pins | A15, A16, A17, A25 B20, B21, B22 | 18, 6, 7, 12 36, 35, 44 |

**NOTE 4:**
SDL AV input pins are 1,2,15,16,17,18,19,20

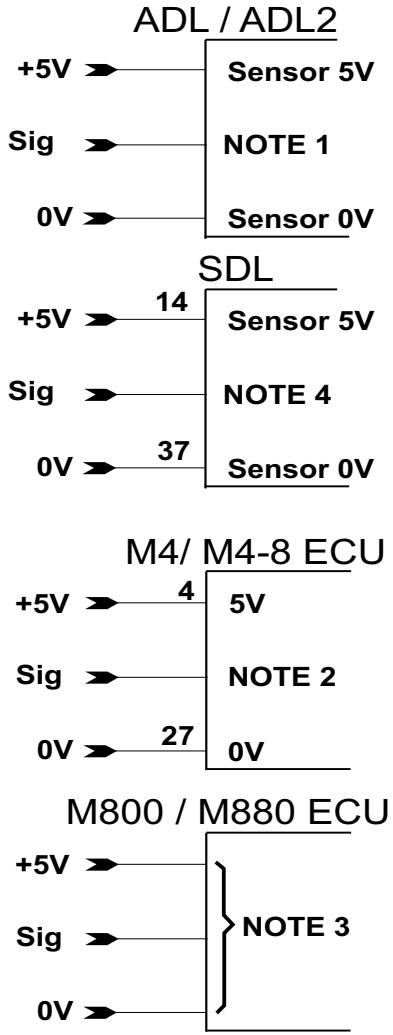


| MoTeC | Title TI PRESSURE SENSORS | | | | Sheet No | Drawing No |
|---|---|---|---|---|---|---|
| | Date 05/12/2006 | Drawn ST | App | Products ADL, ECU | 3 of 5 | X30 |